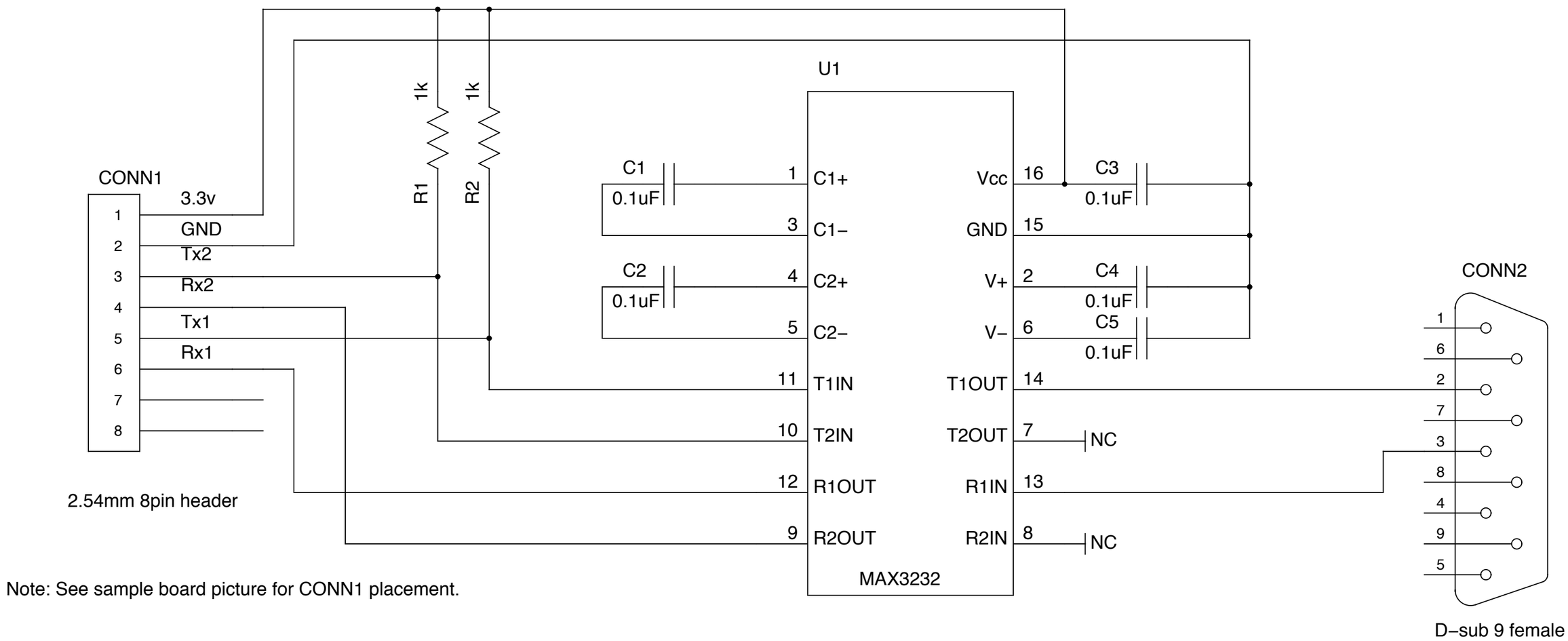

Note: See sample board picture for CONN1 placement.

TITLE	Pmod RS232C adapter		
FILE:		REVISION:	1
PAGE	OF	DRAWN BY:	Yasunori Osana @ U Ryukyus